Aluminium Roofline Products Ltd
Unit 2, Vitruvius Way
Meridian Business Park
Braunstone
Leicester LE19 1WA

Tel: 0116 289 4400 Fax: 0116 289 4433
e-mail: sales@arp-ltd.com
website: www.arp-ltd.com

Agrément Certificate
91/2625
Product Sheet 1

ALUMINIUM ROOFLINE PRODUCTS GUTTERING SYSTEMS

MUSTANG GUTTER AND ACCESSORIES

This Agrément Certificate Product Sheet[1] relates to Mustang Gutter and Accessories, an eaves gutter system comprising coated aluminium gutter lengths, fixing hangers and ancillary items, for use as collection and discharge of rainwater from pitched roofs.

(1) Hereinafter referred to as 'Certificate'.

CERTIFICATION INCLUDES:

- factors relating to compliance with Building Regulations where applicable
- factors relating to additional non-regulatory information where applicable
- independently verified technical specification
- assessment criteria and technical investigations
- design considerations
- installation guidance
- regular surveillance of production
- formal three-yearly review.

KEY FACTORS ASSESSED

Performance of joints — joints between gutter sections and fittings are watertight under conditions of thermal movement in excess of those expected to occur in practice (see section 6).

Resistance to loading — gutters have adequate resistance to snow loading (see section 7).

Flow characteristics — the gutter system provides adequate flow capacities (see section 8).

Durability — the system will have a life expectancy of at least 30 years (see section 10).

The BBA has awarded this Certificate to the company named above for the system described herein. This system has been assessed by the BBA as being fit for its intended use provided it is installed, used and maintained as set out in this Certificate.

On behalf of the British Board of Agrément

Date of Third issue: 12 May 2020

Originally certificated on 27 March 1991

Hardy Giesler
Chief Executive Officer

British Board of Agrément
Bucknalls Lane
Watford
Herts WD25 9BA
tel: 01923 665300
clientservices@bbacerts.co.uk
www.bbacerts.co.uk

Regulations

In the opinion of the BBA, Mustang Gutter and Accessories, if installed, used and maintained in accordance with this Certificate, can satisfy or contribute to satisfying the relevant requirements of the following Building Regulations (the presence of a UK map indicates that the subject is related to the Building Regulations in the region or regions of the UK depicted):

The Building Regulations 2010 (England and Wales) (as amended)

Requirement:	**H3**	**Rainwater drainage**
Comment:		The system will carry the flow of rainwater from the roof to an outfall and minimise the risk of blockage or leakage. See section 8 of this Certificate.
Regulation:	**7(1)**	**Materials and workmanship**
Comment:		The system is acceptable. See section 10 and the *Installation* part of this Certificate.

The Building (Scotland) Regulations 2004 (as amended)

Regulation:	**8(1)(2)**	**Durability, workmanship and fitness of materials**
Comment:		The system satisfies this Regulation. See sections 9.1, 9.2 and 10 and the *Installation* part of this Certificate.
Regulation:	**9**	**Building Standards applicable to construction**
Standard:	3.6	Surface water drainage
Comment:		The system satisfies the relevant requirements of this Standard, with reference to clause 3.6.1[(1)]. See section 8 of this Certificate.

(1) Technical Handbook (Domestic).

The Building Regulations (Northern Ireland) 2012 (as amended)

Regulation:	**23(a)(i)(iii)(b)**	**Fitness of materials and workmanship**
Comment:		The system is acceptable. See section 10 and the *Installation* part of this Certificate.
Regulation:	**82**	**Rainwater drainage**
Comment:		The system will contribute to satisfying the relevant requirements of this Regulation. See section 8 of this Certificate.

Construction (Design and Management) Regulations 2015
Construction (Design and Management) Regulations (Northern Ireland) 2016

In the opinion of the BBA, there is no information in this Certificate which relates to the obligations of the client, designer (including Principal Designer) and contractor (including Principal Contractor) under these Regulations.

Additional Information

NHBC Standards 2020

In the opinion of the BBA, Mustang Gutter and Accessories, if installed and used in accordance with this Certificate, can satisfy or contribute to satisfying the relevant requirements in relation to *NHBC Standards*, Part 7 *Roofs,* Chapters 7.1 *Flat roofs and balconies* and 7.2 *Pitched roofs, Part 7.2.22*.

1 Description

1.1 Mustang Gutter and Accessories is an eaves guttering system comprising (see Figure 1 and Table 1):

- gutter — 0.9 mm thick, 125 mm wide by 87 mm deep aluminium ogee profile, available in lengths of up to 30 m, with a 25 µm total thickness coating of primer/ polyester, primer/polyvinylidene fluoride/acrylic, or primer/polyamide-modified polyester
- fixing hangers A and C — 16 mm wide extruded mill finish aluminium, either 2.25 mm (A) or 2 mm (C) thick, secured using stainless steel screws
- end caps — polycarbonate, snap-fitted to gutter end and sealed
- outlets/leaf traps — 60 or 70 mm diameter, aluminium or low-density polyethylene (LDPE) with UV stabilisers, with pre-formed hole for fixing
- locking corners and connector/expansion joints — two-part polycarbonate fittings, sealed and fastened with stainless steel screws (see section 1.3)
- sealant — silicone sealant for use between gutter joints, end caps, outlets and corner pieces.

Figure 1 Some system components

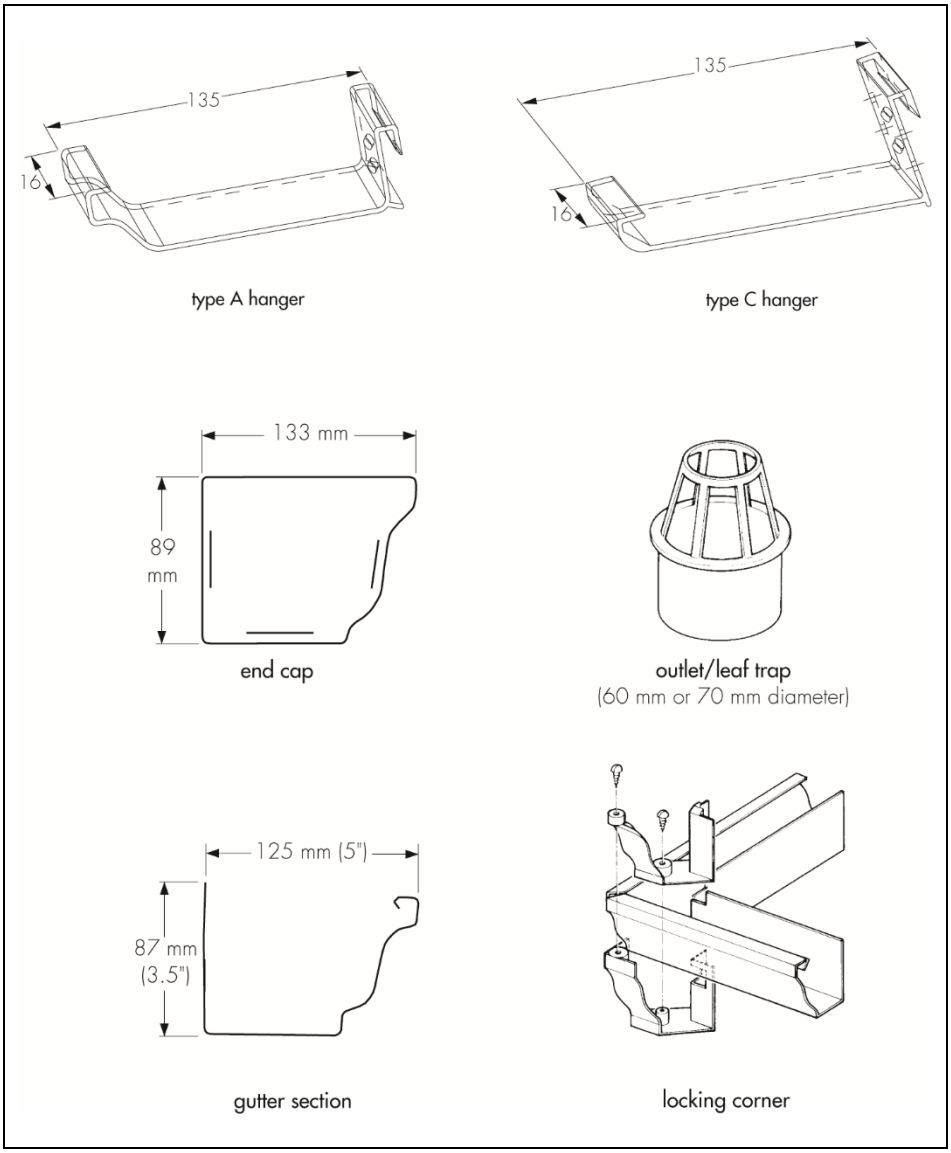

1.2 The gutters, end caps, locking corners and connector/expansion joints are available in black (RAL 9005), brown (BS08B29), dark grey (RAL 7016), grey (RAL 7037) or white (RAL 9016).

1.3 Also used with the system, but outside the scope of this Certificate, are M4 by 30 mm long A2 stainless steel screws, used with the corner fitting pieces.

Table 1 Product range

Description	Product code
300mm wide 0.9mm coil	CL8C900
External 90° corner	PCSMX90
Internal 90° corner	PCSMI90
External 135° corner	PCSMX135
Non-Standard Angle Corners	available on request
Straight Connector	PCCCS
Left Hand Endcap	PCECL
Right Hand Endcap	PCECR
Hanger Type A	HA
Hanger Type C	HC
60mm Outlet	OP60
70mm Outlet	OP70
60mm Leaftrap Outlet	PLT60
70mm Leaftrap Outlet	PLT70
Arbosil 1096 Silicone Sealant	SA96

2 Manufacture

2.1 The gutter is manufactured on site by roll-forming continuous lengths from coated aluminium coil pre-cut to width into the predetermined ogee shape. The fixing support brackets, end caps, outlets, locking corners and connector/expansion joints are bought-in to an agreed specification.

2.2 As part of the assessment and ongoing surveillance of product quality, the BBA has:

- agreed with the manufacturer the quality control procedures and product testing to be undertaken
- assessed and agreed the quality control operated over batches of incoming materials
- monitored the production process and verified that it is in accordance with the documented process
- evaluated the process for management of nonconformities
- checked that equipment has been properly tested and calibrated
- undertaken to carry out the above measures on a regular basis through a surveillance process, to verify that the specifications and quality control operated by the manufacturer are being maintained.

3 Delivery and site handling

3.1 Reasonable care should be taken to avoid damage during storage, handling and installation.

3.2 The system components are separated with paper, boxed and labelled.

Assessment and Technical Investigations

The following is a summary of the assessment and technical investigations carried out on Mustang Gutter and Accessories.

Design Considerations

4 Use

4.1 Mustang Gutter and Accessories are satisfactory for use as eaves guttering for conveying rainwater from pitched roofs to suitable outlets. It is important to ensure that fascia board or fixing background is in good and secure condition.

4.2 The gutter is for use with downpipes and fittings complying with BS EN 12200-1 : 2016 and BS EN 1462 : 2004.

4.3 Slight undulation in the external face of the gutter may be evident, particularly if the facing is uneven or where dark-coloured gutters are exposed to direct sunlight. This will not affect the serviceability of the gutter.

5 Practicability of installation

The system is designed to be installed only by installers who have been trained and approved by the Certificate holder.

6 Performance of joints

Joints between adjacent gutter sections made in accordance with this Certificate are watertight under conditions of thermal movement in excess of those expected to occur in practice.

7 Resistance to loading

The gutter system has adequate resistance to impacts, snow, water and other loads likely to occur during and after installation.

8 Flow characteristics

The flow capacities, when calculated in accordance with BS EN 12056-3 : 2000, are given in Table 2 of this Certificate.

Table 2 Free flow capacities

Component	Flow capacity ($l \cdot s^{-1}$)
Gutter[1]	2.33
Outlet	
60 mm	1.56
70 mm	2.12

(1) Section properties based on Figure 2.

Figure 2 Flow capacity

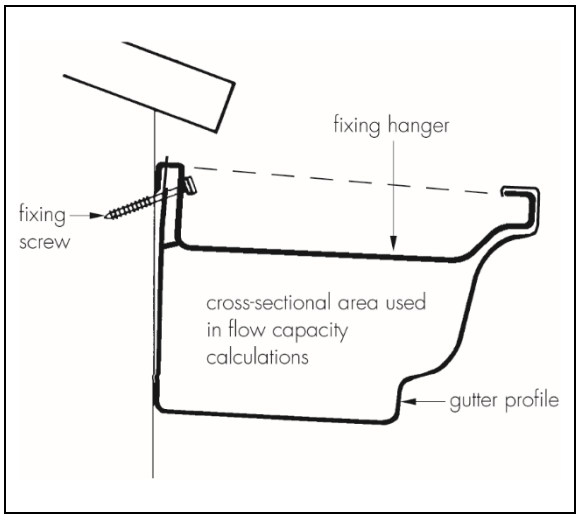

9 Maintenance

9.1 The gutter can be readily cleared of debris (eg leaf litter).

9.2 Installed correctly, the gutter joints will be maintenance-free. However, if accidentally damaged, joints can be replaced or slackened, resealed and re-assembled

9.3 Where the gutter is damaged along the length in the centre position, the damaged portion can be removed and a new length inserted by the use of the connector/expansion joints.

10 Durability

10.1 The system will have a life expectancy of at least 30 years.

10.2 The performance of the coatings will depend upon the specification, colour chosen, and the environment, location and aspect face. It will retain a good appearance for at least 15 years in non-corrosive environments, and at least 10 years in severe industrial environments.

10.3 The coated aluminium performs satisfactory in all normal atmospheric conditions (including coastal and industrial, but excluding the immediate vicinity of, and downwind from, sources of abnormal corrosive contaminants, such as chemical works, cement works and copper foundries).

10.4 A planned maintenance cycle can be introduced if an extended design life is required.

11 Reuse and recyclability

The gutter and fixing hanger components are made from aluminium, which can be recycled.

Installation

12 General

12.1 Installation must be carried out by approved installers trained by the Certificate holder. The installation must be in accordance with BS EN 12056-3 : 2000 when applicable.

12.2 The system is fabricated to the specification for the particular installation.

13 Procedure

13.1 Downpipes are positioned and marks corresponding to their centres are made on the fascia board. An exact measurement is taken of the length of gutter required, noting the marked positions of the downpipes. An initial 1 m length of the gutter section is roll-formed and an end cap fitted. Silicone sealant is used to seal the joint and roll-forming continues in 5 metre increments, pausing to clip in aluminium fixing brackets at centres not exceeding 450mm before continuing roll-forming to the required length. The formed gutter is cut to length and an endcap fitted to the other end.

13.2 Corners are formed by mitring the ends of the gutter lengths and the installation of a two-piece polycarbonate locking corner fitting sealed with silicone sealant and held together with stainless steel screws.

13.3 Provision for expansion to take place is necessary in gutters in excess of 30 m in length. Connector/expansion joints are installed in the same manner as the corner fittings (see Figure 3).

13.4 At the required downpipe positions, a hole is cut using a cylindrical metal cutter into the base of the gutter, an outlet or leaftrap outlet is fitted and silicone sealed. The gutter is positioned at the required height and fixed with stainless steel screws, located in the pre-drilled holes in the fixing hangers and driven horizontally through the back of the gutter into the prepared fascia.

Figure 3 Connector/expansion joint

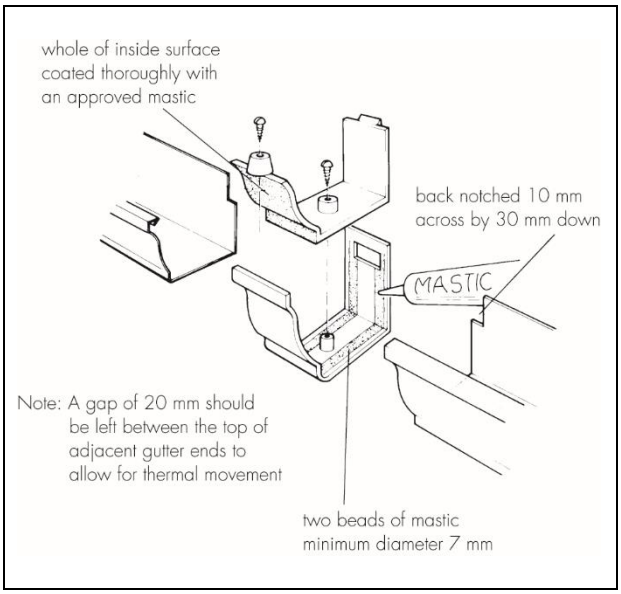

Technical Investigations

14 Tests

14.1 Tests were conducted and the results assessed to determine:

- watertightness of joints
- resistance of gutter to loading
- performance of expansion joints
- effect of temperature on 30 m length of gutter.

14.2 An assessment of data was made in relation to:

- impact resistance
- dimensional accuracy
- flow capacity
- ease of cleaning

- thermal movement.

15 Investigations

15.1 The manufacturing process was evaluated, including the methods adopted for quality control, and details were obtained of the quality and composition of the materials used.

15.2 Site visits were carried out to assess the practicability of installation and the performance in use.

Bibliography

BS EN 1462 : 2004 *Brackets for eaves gutters — Requirements and testing*

BS EN 12056-3 : 2000 *Gravity Drainage Systems inside Buildings — Roof drainage, layout and calculation*

BS EN 12200-1 : 2016 *Plastics rainwater piping systems for above ground external use — Unplasticized poly(vinyl chloride) (PVC-U) — Specifications for pipes, fittings and the system*

16 Conditions

16.1 This Certificate:

- relates only to the product/system that is named and described on the front page
- is issued only to the company, firm, organisation or person named on the front page – no other company, firm, organisation or person may hold or claim that this Certificate has been issued to them
- is valid only within the UK
- has to be read, considered and used as a whole document – it may be misleading and will be incomplete to be selective
- is copyright of the BBA
- is subject to English Law.

16.2 Publications, documents, specifications, legislation, regulations, standards and the like referenced in this Certificate are those that were current and/or deemed relevant by the BBA at the date of issue or reissue of this Certificate.

16.3 This Certificate will remain valid for an unlimited period provided that the product/system and its manufacture and/or fabrication, including all related and relevant parts and processes thereof:

- are maintained at or above the levels which have been assessed and found to be satisfactory by the BBA
- continue to be checked as and when deemed appropriate by the BBA under arrangements that it will determine
- are reviewed by the BBA as and when it considers appropriate.

16.4 The BBA has used due skill, care and diligence in preparing this Certificate, but no warranty is provided.

16.5 In issuing this Certificate the BBA is not responsible and is excluded from any liability to any company, firm, organisation or person, for any matters arising directly or indirectly from:

- the presence or absence of any patent, intellectual property or similar rights subsisting in the product/system or any other product/system
- the right of the Certificate holder to manufacture, supply, install, maintain or market the product/system
- actual installations of the product/system, including their nature, design, methods, performance, workmanship and maintenance
- any works and constructions in which the product/system is installed, including their nature, design, methods, performance, workmanship and maintenance
- any loss or damage, including personal injury, howsoever caused by the product/system, including its manufacture, supply, installation, use, maintenance and removal
- any claims by the manufacturer relating to CE marking.

16.6 Any information relating to the manufacture, supply, installation, use, maintenance and removal of this product/system which is contained or referred to in this Certificate is the minimum required to be met when the product/system is manufactured, supplied, installed, used, maintained and removed. It does not purport in any way to restate the requirements of the Health and Safety at Work etc. Act 1974, or of any other statutory, common law or other duty which may exist at the date of issue or reissue of this Certificate; nor is conformity with such information to be taken as satisfying the requirements of the 1974 Act or of any statutory, common law or other duty of care.

British Board of Agrément
Bucknalls Lane
Watford
Herts WD25 9BA
tel: 01923 665300
clientservices@bbacerts.co.uk
www.bbacerts.co.uk